batterX® home series

GRID INDEPENDENT UPS ENERGY STORAGE

h3 3000w single-phase
h5 €CO 5000w single-phase

5000w single-phase h5
10000w three-phase h10

www.batterx.io

WORKING PRINCIPLE

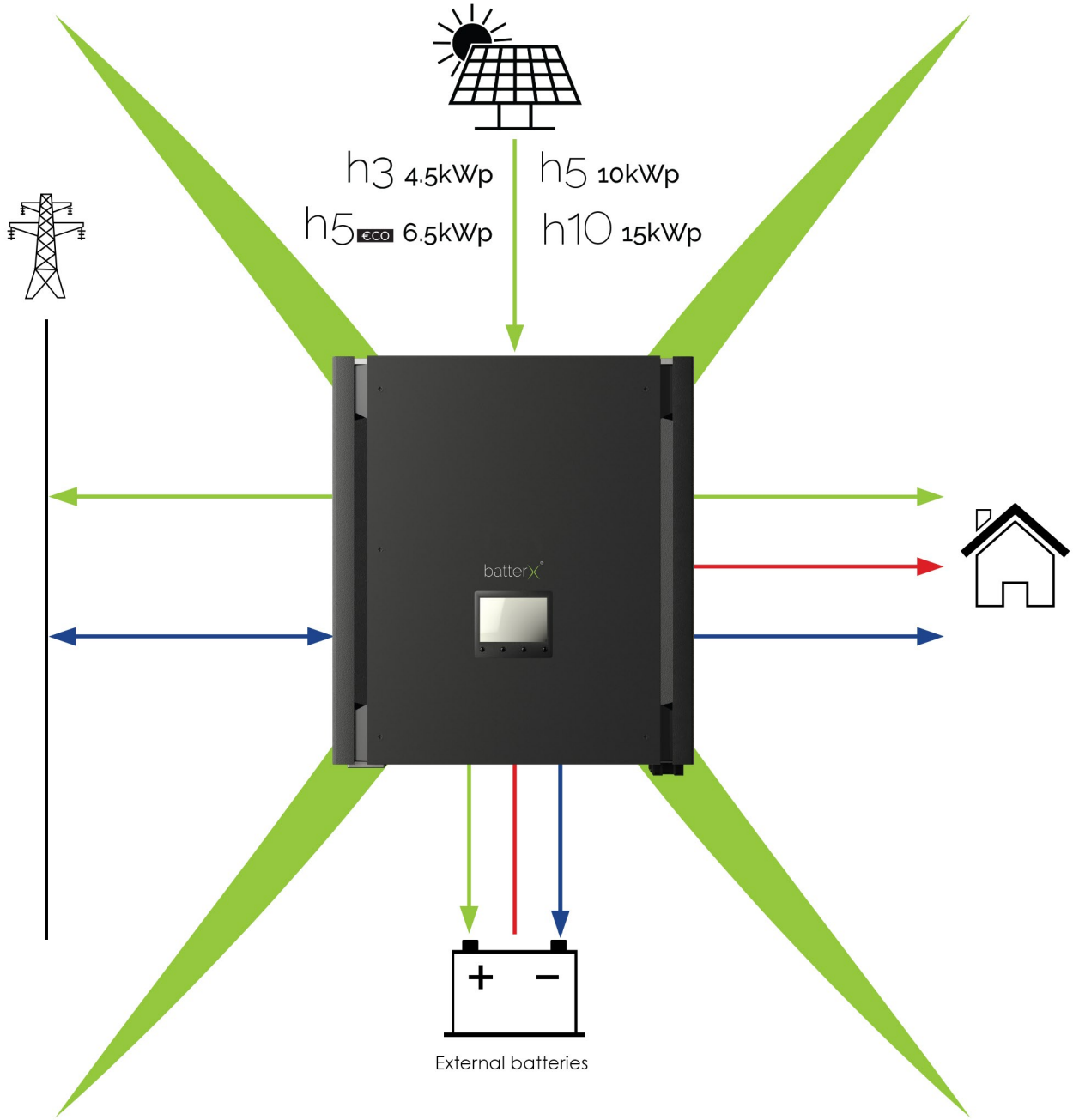

ON-GRID INVERTER

- 3/5KW single-phase 10KW three-phase
- Grid protection (VDE0126-1-1, VDE AR N4105)
- Programmable battery charge (best price/kWh)

ENERGY STORAGE

- Capacity 5 to 50kWh
- Compatible with LiFePO and Lead batteries
- Programmable discharge parameters

UPS PROTECTION

- Emergency power supply: 3/5/10kW
- Battery switching time <10msec (crucial for PC and other sensitive equipment)
- With or without (off-grid) grid connection

batterX® THE DIFFERENCE...

- **FLEXIBILITY**
  Choosing the cheapest energy provider
- **INDEPENDENCY**
  Use your energy when you want
- **FREEDOM**
  No contract obligations
- **ELECTRIC CARS**
  Perfect in combination with electric cars
- **SCALABLE**
  Optimization and updates
- **PHOTOVOLTAIC INSTALLATION**
  PV power bigger than inverter power (perfect for storage)
- **SECURITY**
  UPS protection against power failures
- **CHOICE**
  Several battery technologies are available

TECHNICAL DRAWING

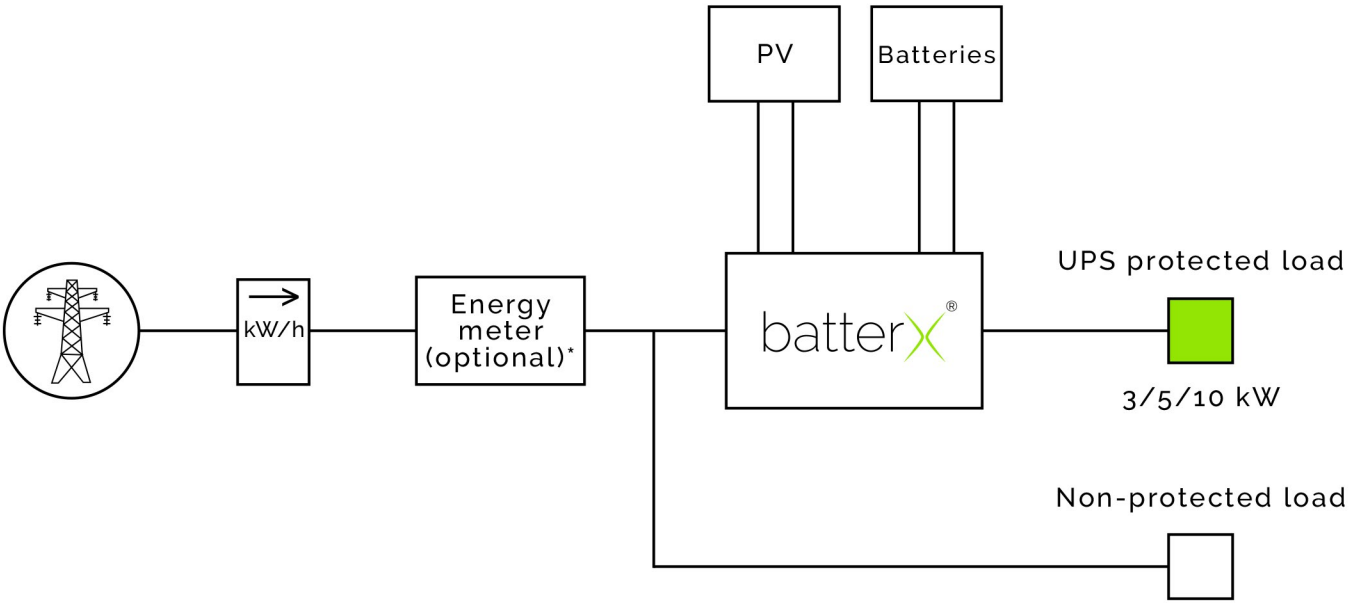

*Energy meter for feed-in limitation (example: EEG conformity for Germany) and «App&Web» monitoring

SPECIFICATIONS

	batterX h3 (1/1)	batterX h5 €CO (1/1)	batterX h5 (1/1)	batterX h10 (3/3)
UPS Output power	3000W/<10msec	5000W/<10msec	5000W/<10msec	10000W/<10msec
Max PV power	4500W	6500W	10000W	14850W
On grid power	3000W	5000W	5000W	10000W
PV input (DC)				
Voltage range min/max	116Vdc / 500Vdc	116Vdc / 500Vdc	225Vdc / 900Vdc	320Vdc / 900Vdc
MPPT voltage min/max	250Vdc - 450Vdc	120Vdc - 150Vdc	250Vdc - 850Vdc	400Vdc - 800Vdc
Number of MPPT / current max	1/1 x 18A	2/2 x 13A	2/2 x 10A	2/2 x 18.6A
Output (AC)				
Nominal current	13A	23,9A	21A	14,5A per phase
Efficiency				
Efficiency (DC/AC)	96%			
Hybrid efficiency	93%			91%
Input (AC)				
Max current	30A	40A	40A	40A
Battery and charger				
Battery voltage	48Vdc			
Specifications				
Dimensions (DxWxH), mm	107x438x480	110x450x445	204x460x600	167,5x500x622
Weight, kg	15,5	16	29	45
Interface				
Communication	RS232 / USB	RS232 / USB	RS232 / USB / CAN-BUS	RS232 / USB / CAN -BUS
Intelligent slot	Modbus and AS-400 card (SNMP optional)			
Additional features				
In parallel up to 6 units	-	-	✓	✓
Dry relay contacts	-	-	✓	✓
EPO (Emergency Power Off)	-	-	✓	✓
External t° sensors connection	-	-	✓	✓
PV on/off switch	-	-	✓	✓
Generator input	-	-	✓	-
Generator relay contacts	-	-	-	✓
Standards				
Quality	ISO9001 / CE			
Security	EN61000-6-1, EN61000-6-2, EN61000-6-3, EN61000-6-4, EN55022, EN61000-3-2, EN61000-3-12, EN61000-3-3, EN61000-3-11 VDE0126-1-1, VDE AR N4105, EN50178, IEC62109, DK5940/ENEL 2011/CEI0-21, G83/59/EEG2012, AS3100/4777...etc.			
Warranty	5 years			

«APP & WEB» MONITORING

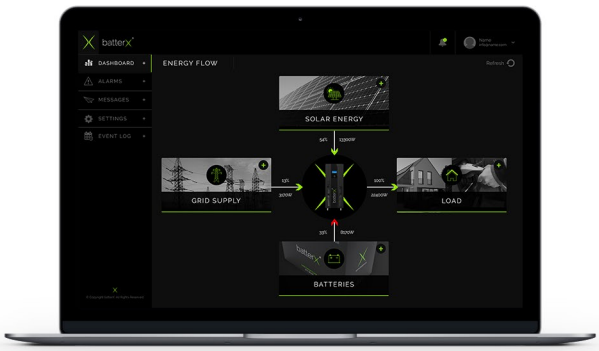

www.batterx.io